REVISIONS			
REV	DESCRIPION	SING	DATE
			/ /

DIMENSION300(D) x 101(W) x 125(H)mm

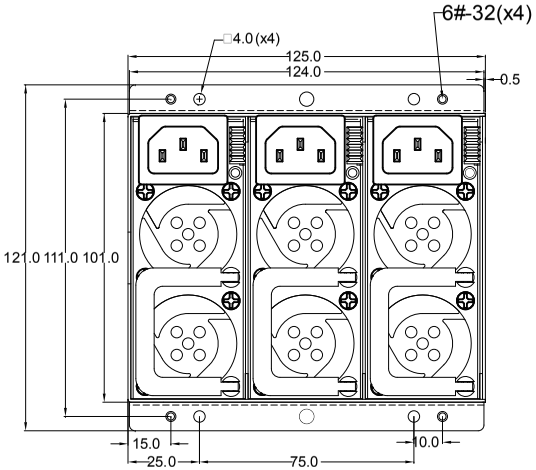

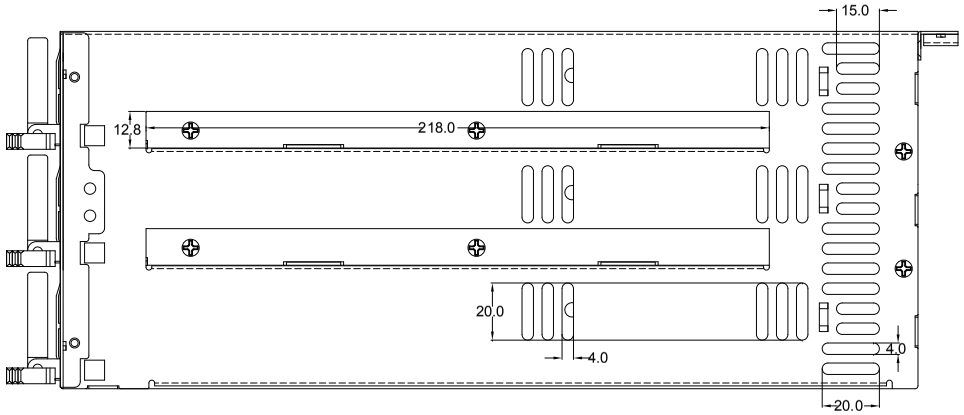

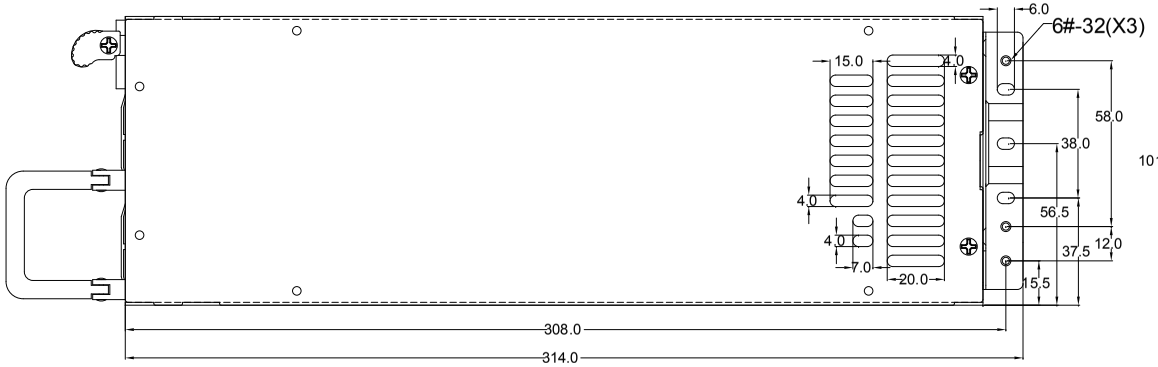

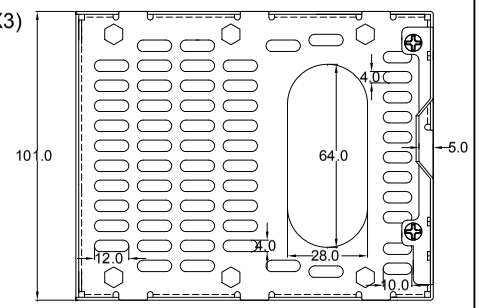

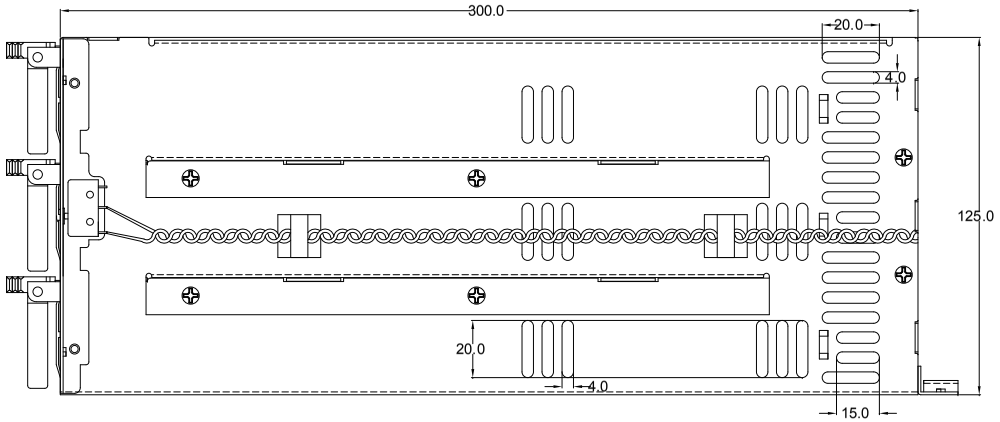

TOLEANCES: .XXX=± .025 .XX= ± .1 .X= ± .2	MATERIAL	SPPC T1.0		UNITS	mm	SURE STAR COMPUTER	
	APPROVE BY	CHECK BY	DRAW BY	DRAW NO			TC-1200_1350RVN3
PROJECTION:			JACKY	SHEET	OF	MODEL NO	
				DATE	2007,7,18	PART NO	